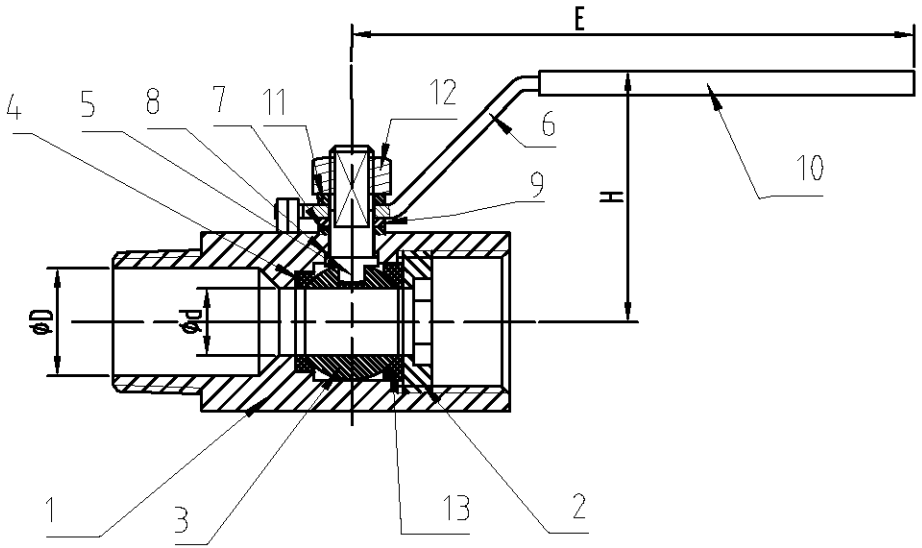

SIZE	1/4X1/4	1/2X1/4	1/2X1/2
ΦD±0.5	8	8	14.5
Φd±0.5	5	9.2	9.2
E ± 3	40/72	94	94
H ± 3	27	42	42
L ± 1	46	54	60.5
L1 ± 1	12	12	18.5

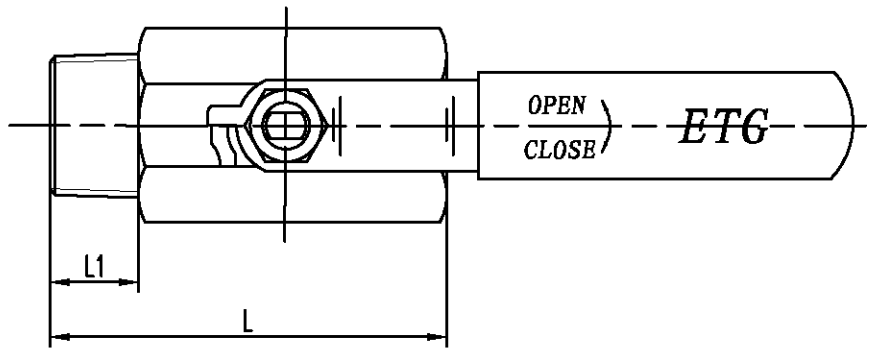

NO	PARTS	MATERIAL	QTY
1	BODY	316	1
2	BODY INSERT	316	1
3	BALL	316	1
4	SEAT	PTFE	1
5	STEM	316	1
6	HANDLE	304	1
7	STEM PACKING	PTFE	1
8	THRUST WASHER	PTFE	1
9	GLAND RING	304	1
10	HANDLE COVER	PLASTIC	1
11	STEM WASTHER	304	1
12	STEM NUT	304	1
13	JOINT GASKET	PTFE	1

1-Pce Reduced Bore
Male/Female Ball valve

ETG-R1/MF